KIR-DDOS-ROT Replacement Optical Tube Assembly Installation Sheet

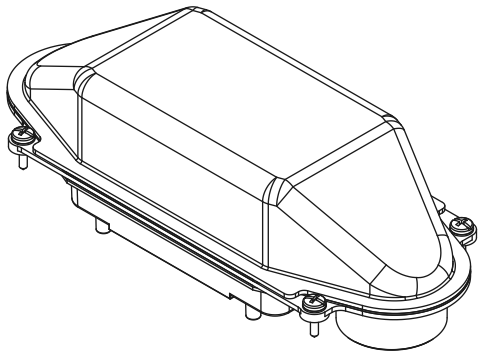

Description

The KIR-DDOS-ROT replaces the optical tube assembly in KIR-DDOS duct smoke detectors.

Installation

Install this device in accordance with applicable national and local codes, ordinances, and regulations.

Caution: Risk of equipment damage. Using excessive force to tighten screws may damage the product. Tighten screws firmly, but do not overtighten. Do not use power tools to tighten screws.

Note: You can replace the optical tube assembly while the duct smoke detector is attached to the HVAC duct.

To install the device:

1. Unscrew the four captive screws on the optical tube assembly cover, and then remove it from the duct smoke detector housing. See Figure 1.
2. Unscrew the four captive screws on the optical tube assembly, and then remove it from the duct smoke detector housing.
3. Gently seat the new optical tube assembly into the duct smoke detector housing.

   Make sure the optical tube assembly is fully seated before proceeding to the next step.
4. Using the four captive screws, secure the new optical tube assembly to the duct smoke detector housing.
5. Using the four captive screws, secure the optical tube assembly cover to the duct smoke detector housing.
6. Test for proper operation. See *KIR-DDOS Intelligent Duct Smoke Detector Technical Bulletin* (P/N 3102782).

Figure 1: Assembly diagram

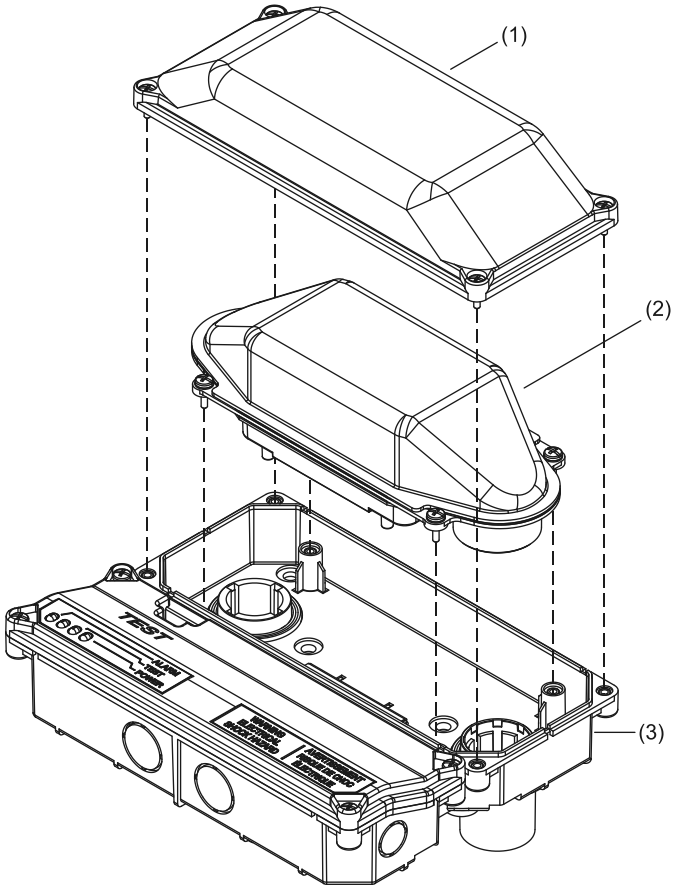

(1) Optical tube assembly cover
(2) Optical tube assembly
(3) Duct smoke detector housing

Specifications

Operating voltage	15.20 to 19.95 VDC
Smoke detection method	Photoelectric
Air velocity	100 to 4,000 ft./min (0 to 20.32 m/s)
Air pressure differential	0.01 to 0.83 inches of water
Sensitivity	0.5 to 4.5 %/ft obscuration
Environmental compensation	Automatic
Screw torque	
Covers	6.0 +/− 0.5 in-lb (6.9 +/− 0.5 kgf cm)
Optical tube assembly	5.0 +/− 0.5 in-lb (5.7 +/− 0.5 kgf cm)
Operating environment	
Temperature	32 to 122°F (0 to 50°C)
Relative humidity	0 to 93% noncondensing
Storage temperature	32 to 122°F (0 to 50°C)

Contact information

For contact information, see www.kiddefx.kidde.com.

© 2023 Carrier

P/N 3102965-EN • REV 001 • ISS 30NOV23